Wheel block

RB 250-V

reinforced design

WHEEL BLOCK RB 250-V

Primary dimensions

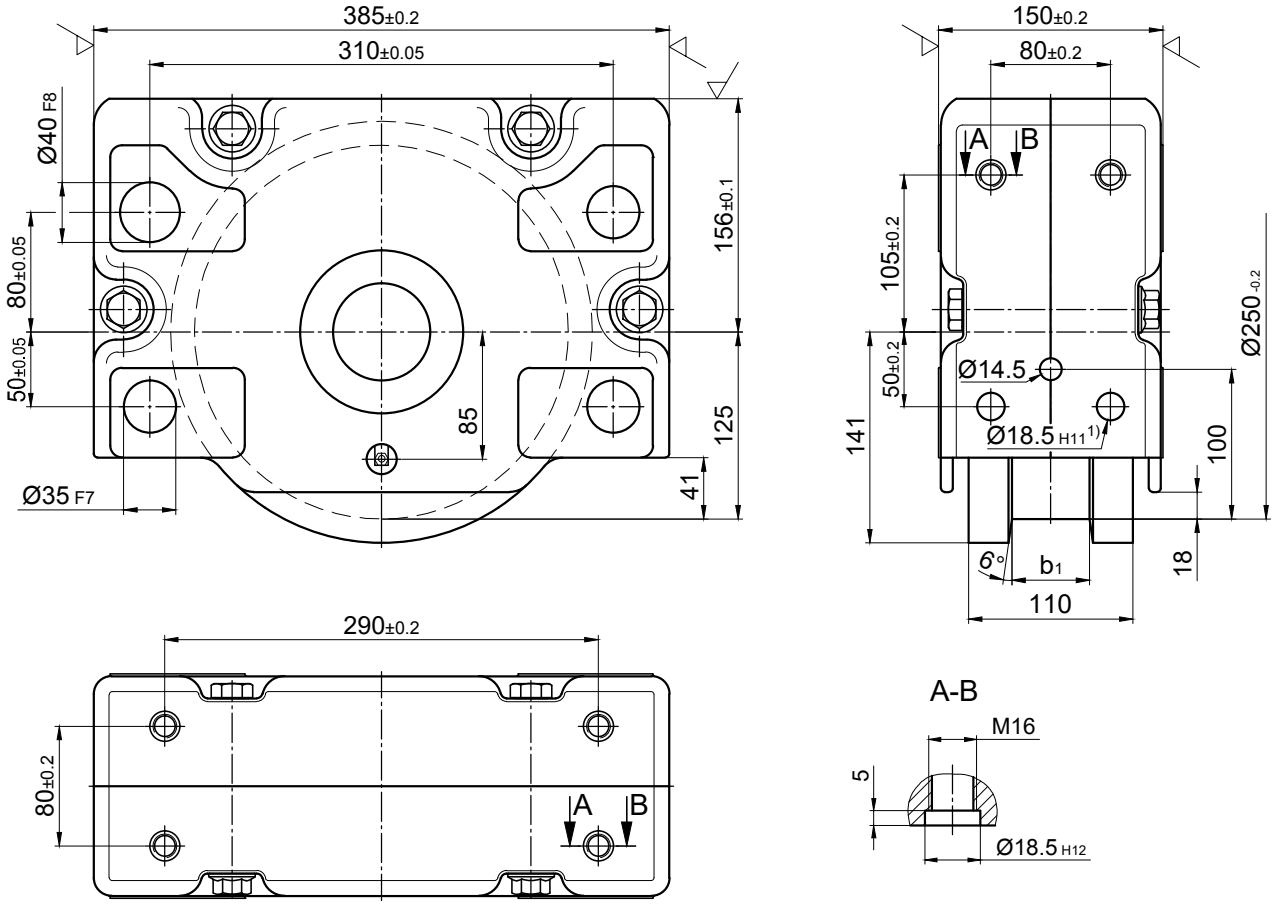

1) Due to the use of retained nuts M16 in the holes 18.5H11, the threaded connection are attained as in section A-B

Weight: **ca. 57 kg**
max. wheel load: 16 000 kg

Ordering examples

RBA 250×55
Wheel block 250, driven, with internal taper, reinforced design, with two-sided wheel flange, Design Form 1, running tread 65 mm

RBN 250×55
Wheel block 250, non driven, without internal taper, reinforced design, with two-sided wheel flange, Design Form 1, running tread 65 mm

RBA 250×110
Wheel block 250, driven, with internal taper, reinforced design, no wheel flanges, Design Form 4

RBA 250
Wheel block 250, driven, with internal taper, reinforced design, with Vulkollan-binding, Design Form 8

Design RBA and RBN refer to Page 5

WHEEL BLOCK RB 250-V

Standard models

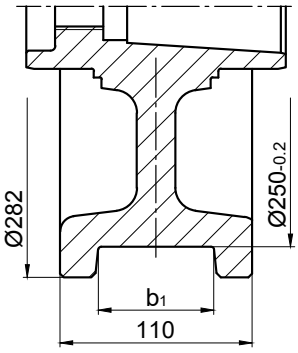

Form 1
two-sided wheel flange

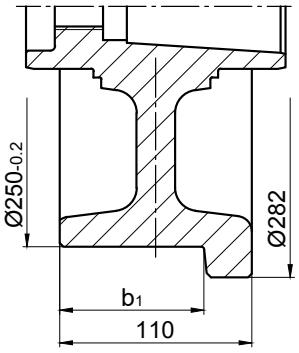

Form 2[1)]
one-sided wheel flange
on the drive side

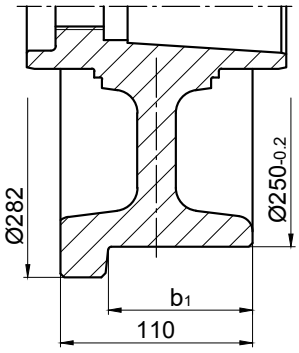

Form 3[1)]
one-sided wheel flange
opposite to the drive side

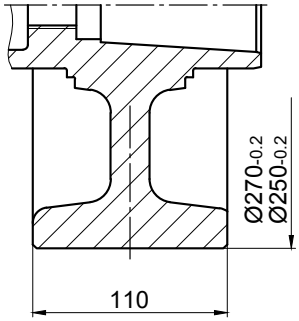

Form 4
no wheel flanges with
cylindrical runnning surface

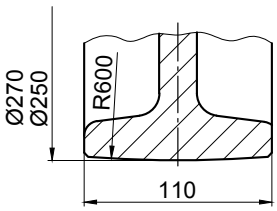

Form 5
no wheel flanges with
spherical running surface

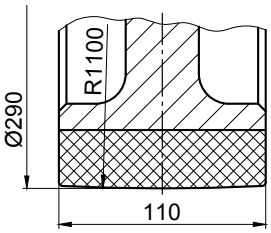

Form 6
with coating
of PA 12 G

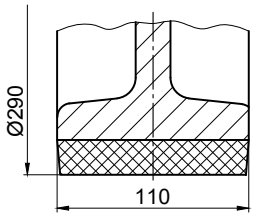

Form 7
with coating
of Vulkollan

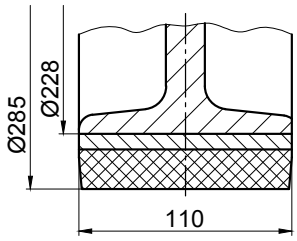

Form 8
with binding
of Vulkollan

Special models

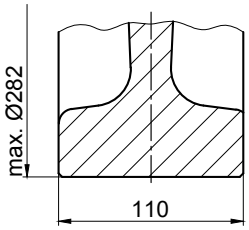

Form 9
no wheel flanges

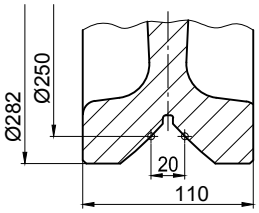

Form 10
with prismatic guide

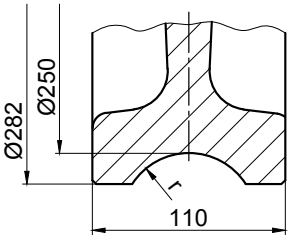

Form 11
with concave groove
r = 1.1× track radius
(recommended)

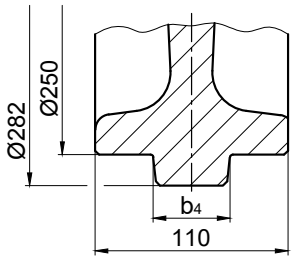

Form 12
with middle wheel flange

Form 1 Running tread b_1 for two-sided wheel flange			**Form 2 und 3** Running tread b_1 for one-sided wheel flange	
minimal	maximal	Standard	minimal	maximal
20	85	65, 75	60	97.5

1) Forms 2 and 3 are identical for the non-driven wheel block RBN

Top connection KA 250.1

Precisely fitted direct attachment as bolted connection (welded construction, roll section, etc.)

Top connection using locking screws for installation in accurately drilled connecting constructions. No adjustment of the wheel blocks is required.

1 Set KA 250.1 comprising of:

4 Locking screws M16×45 –10.9
4 Locking pins 18.5×1×14

Mounting parts for larger steal plate thicknesses and/or adjustable direct connection are available on request.
For the directional version refer to the pattern of drilling KA 250.2 (Page 86).

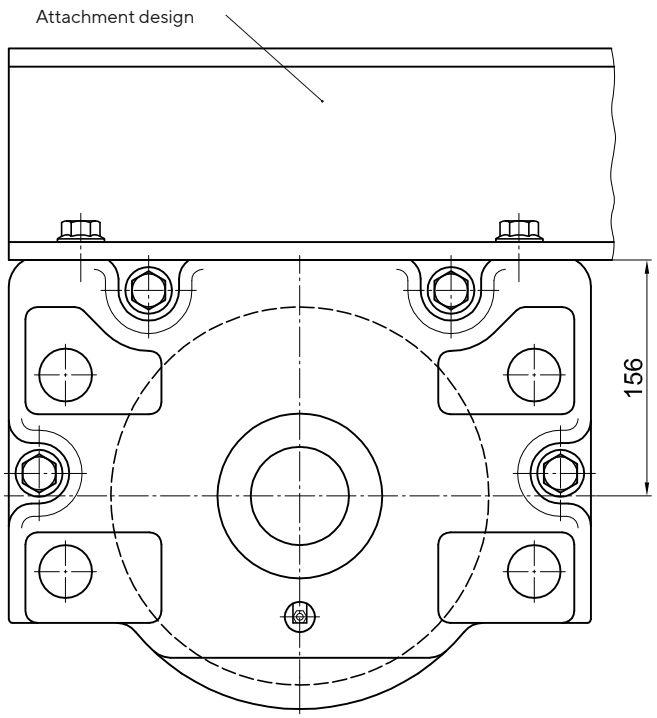

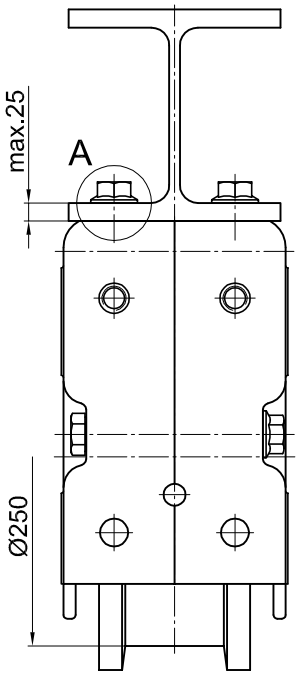

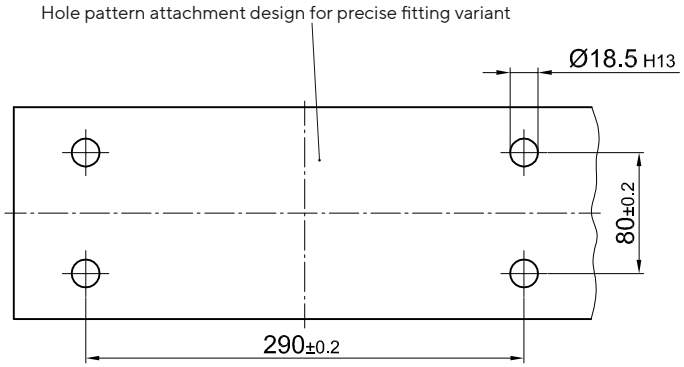

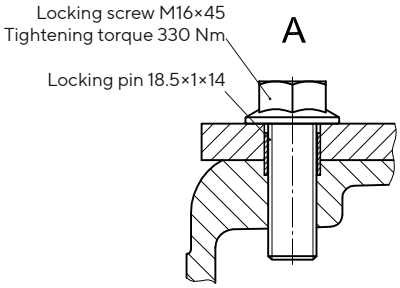

Top connection KA 250.2

Precisely fitted or adjustable direct attachment as bolted connection (welded construction, roll section, etc.)

Top connection using locking pins for installation in attachment design with precisely or larger drilled attachment holes.
For larger drilled attachment holes, the wheel block must be aligned. Subsequently, the wheel block is attached by bolts and should be drilled with the locking pins 8×24 supplied. However, this shouldn't be done in the area of the attachment bolts [1)].
Alignment is not required for precisely drilled attachment holes.

1 Set KA 250.2 comprising of:

4 Grub screws M16×105 - 10.9 ZT
4 Safety nuts M16-10 DIN EN ISO 7042 (DIN 980)
4 Discs 17 DIN 6340
4 Locking pins 8×24 DIN EN ISO 8752 (DIN 1481), for adjustable connection
4 Locking pins 18.5×1×14, for precise connection

Longer locking pins are available for thicker plates.

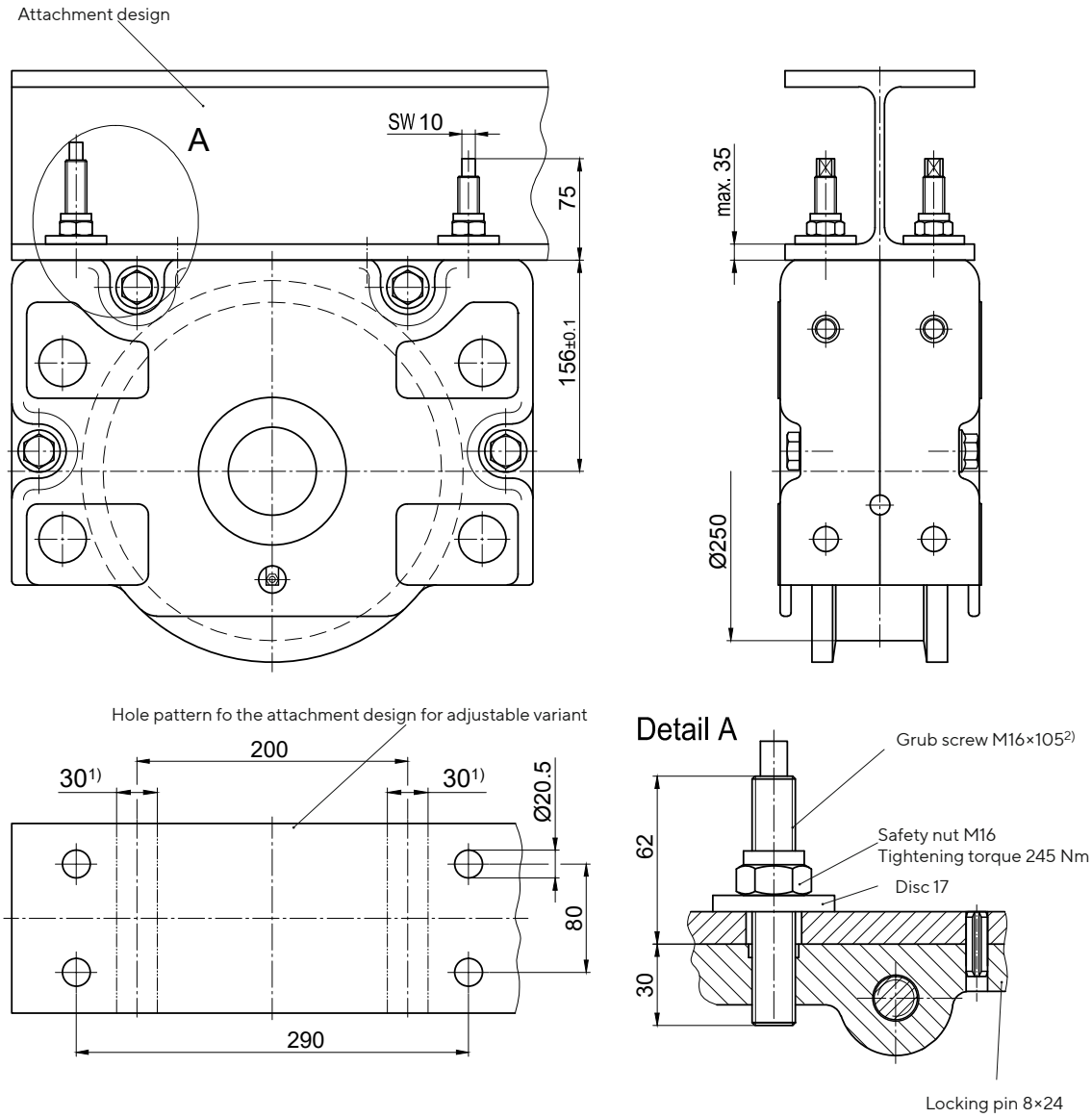

1) Pinning is not permitted in this area !
2) Can be factory-glued in the wheel block housing on request

Pin attachment BA 250.1-V

Pin attachment is adapted to the installation in hollow profiles, floating levers, etc. by means of adjusting washers.

Pin attachment with alignment option using adjusting washers. Alignment option by replacing the adjusting washers only in dismantled condition.

1 Set BA 250.1-V

2 Bolts Ø40h8 x 202
4 Circlipse 40×1.75 DIN 471
4 Spacer bolts
24 Adjusting washers 35×45×0.5 DIN 988

Pin connections are available in special design according to the customer drawing.

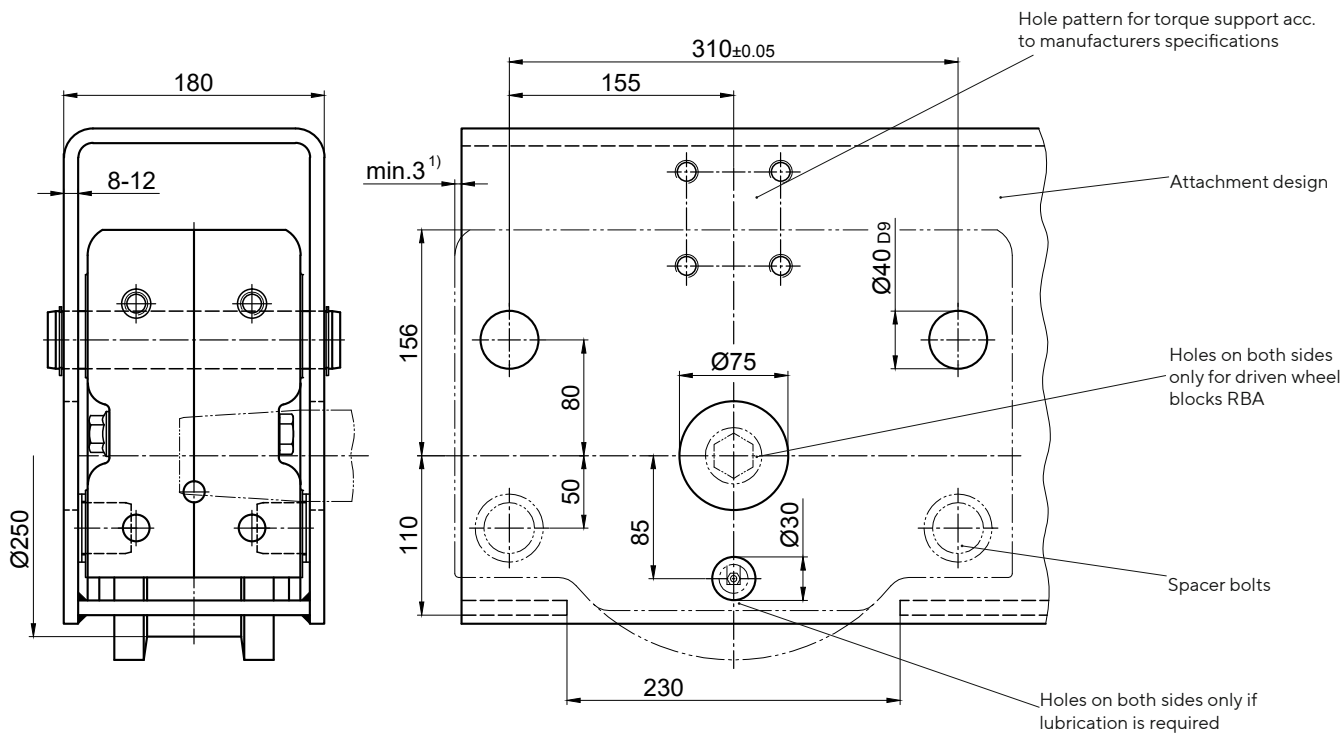

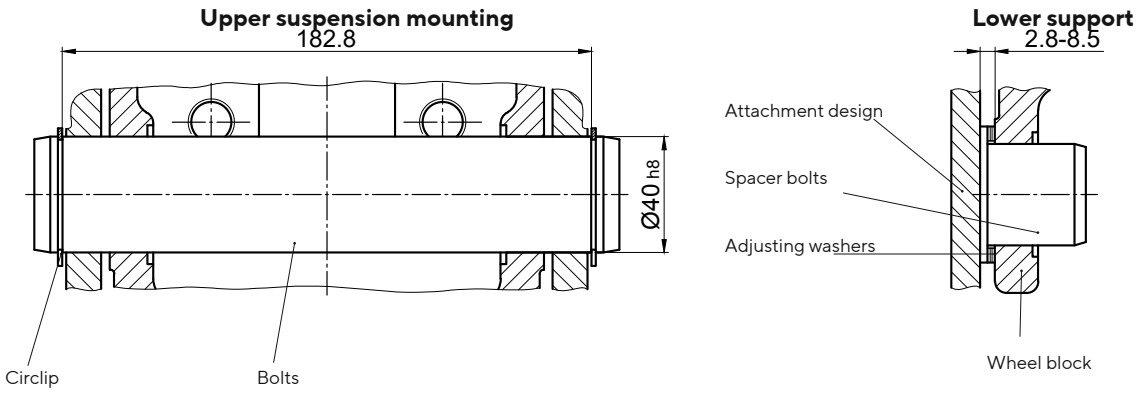

1) Dimension must be observed only with front mounting parts

Pin attachment BA 250.2-V

Adjustable pin attachment for installation in hollow profiles, floating levers, etc.

Pin connection with option to align using adjustable hexagon screws.
The alignment is done in assembled and relieved mode.

1 Set BA 250.2-V comprising of:

2 Bolts Ø40 h8 x 202
4 Circlipse 40×1.75 DIN 471
4 Flanged bushings with internal thread(bonded)
4 Locking screws M16×50 (coated)

Pin connections are available in special design according to the customer drawing.

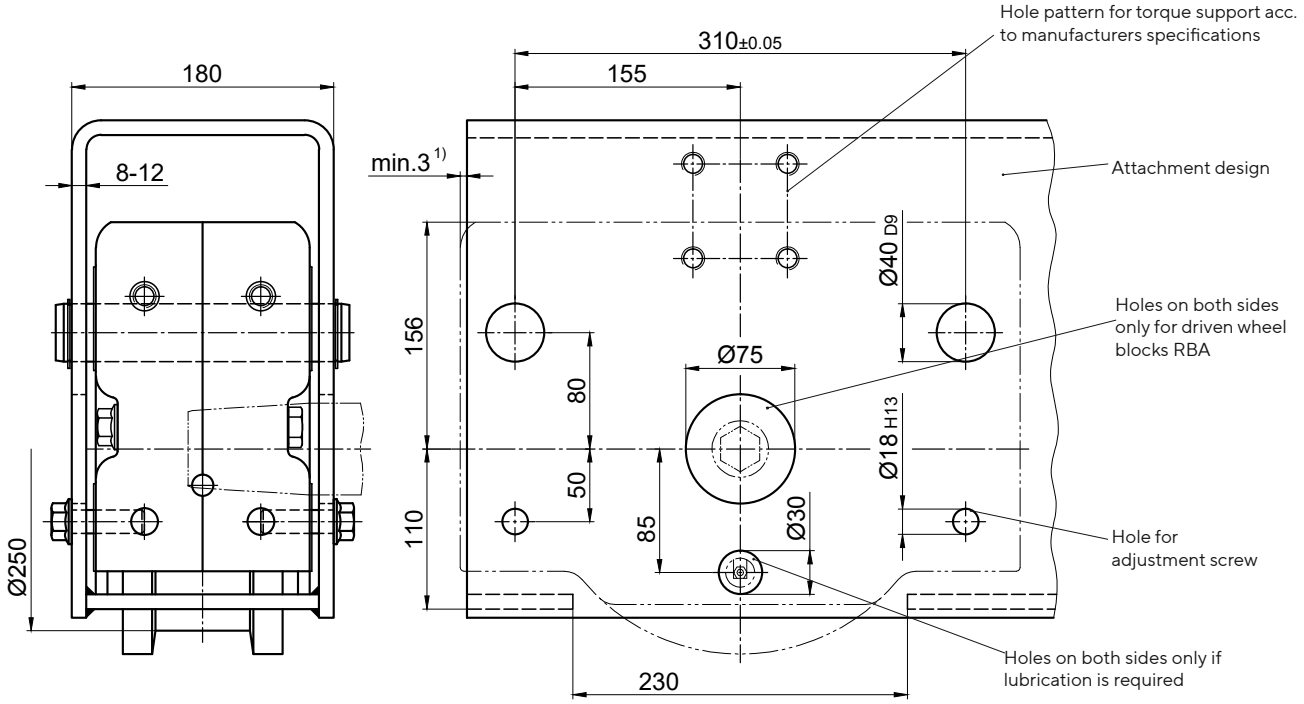

Upper suspension mounting

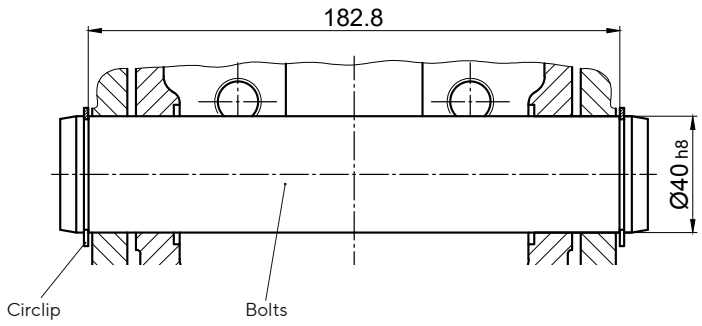

Lower support

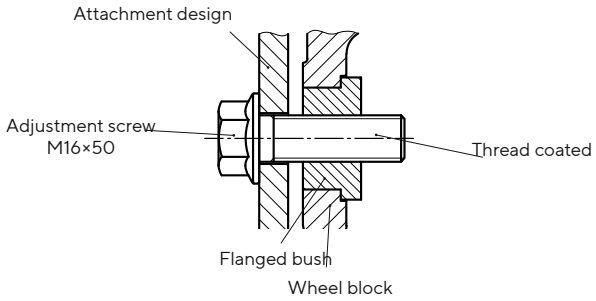

1) Dimension must be observed only with front mounting parts

Pin attachment BA 250.3-V

Pin connection adjustable by grub screws for installation in hollow profiles, swingarms, etc.

Pin connection with alignment possibility by adjustable grub screws. The alignment is done in assembled and relieved mode.

1 Set BA 250.3-V comprising of:

2 Bolts Ø40 h8 x 202
4 Circlipse 40×1.75 DIN 471
4 Grub screws with hexagon socket M 16×45-45H DIN EN ISO 4026 (DIN 913)
4 Safety nuts M 16-10

Pin connections are available in special design according to the customer drawing.

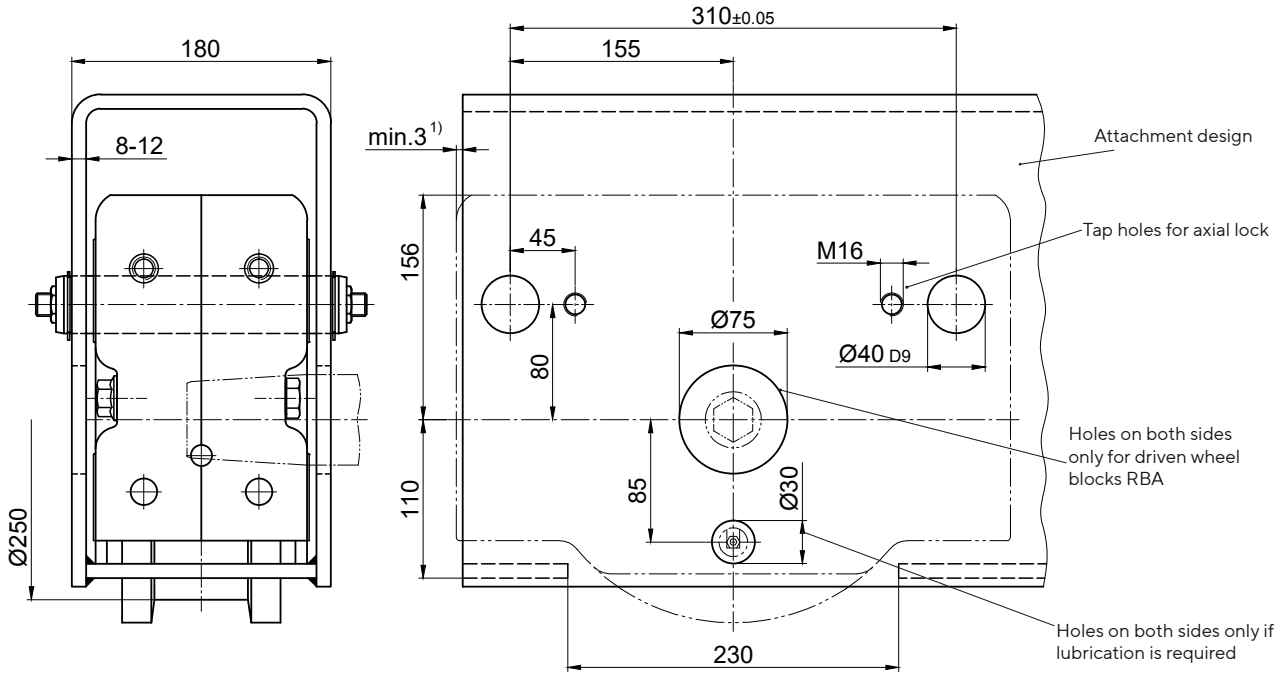

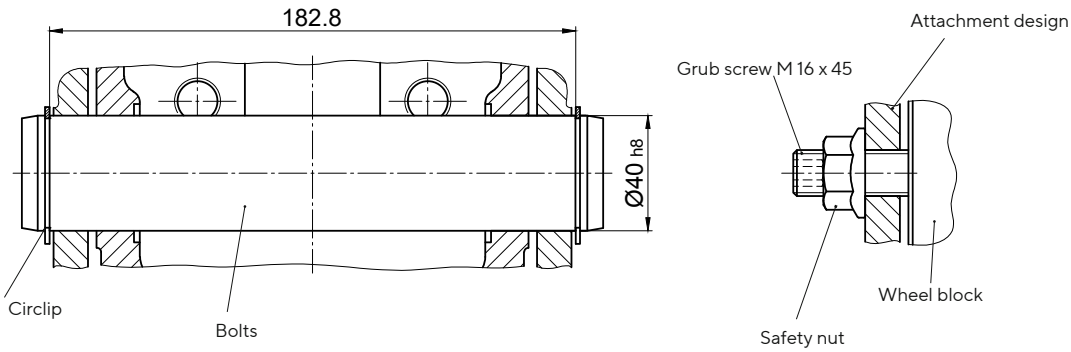

1) Dimension must be observed only with front mounting parts

Side connection WA 250-V

Lateral connection option for low construction designs

1 Set WAA **250-V** (Side connection on the drive side)
1 Set WAN **250-V** (Side connection on the non-driven side)
1 Set WA **250-V** (Side connection on non-driven wheel block RBN)
comprising of:

2 Flanged bushings 40, bonded
2 Locking screws M 20 x 80, 12.9
2 Safety nuts M 20 DIN EN ISO 7042
2 Discs 21

2 Flanged bushings 35, bonded
2 Locking screws M 16 x 75, 10.9 DIN EN ISO 4762
2 Safety nuts M16 DIN EN ISO 7042
2 Discs 17

Attachment variant 1:
Attachment design is accessible from both sides
Trough-hole Ø40 H12 and Ø35 H12

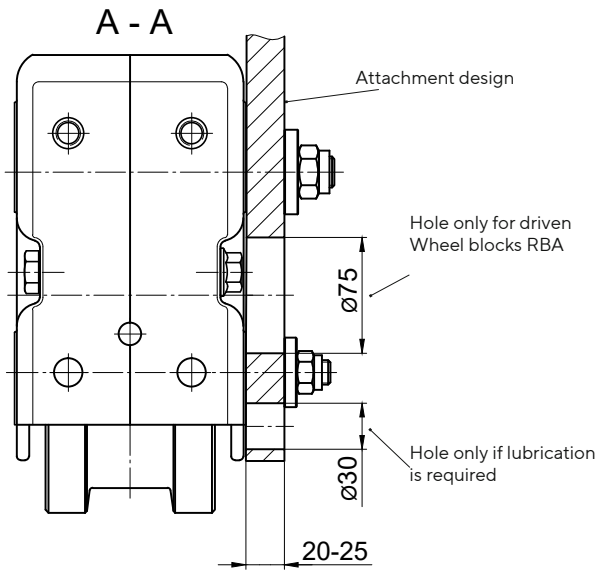

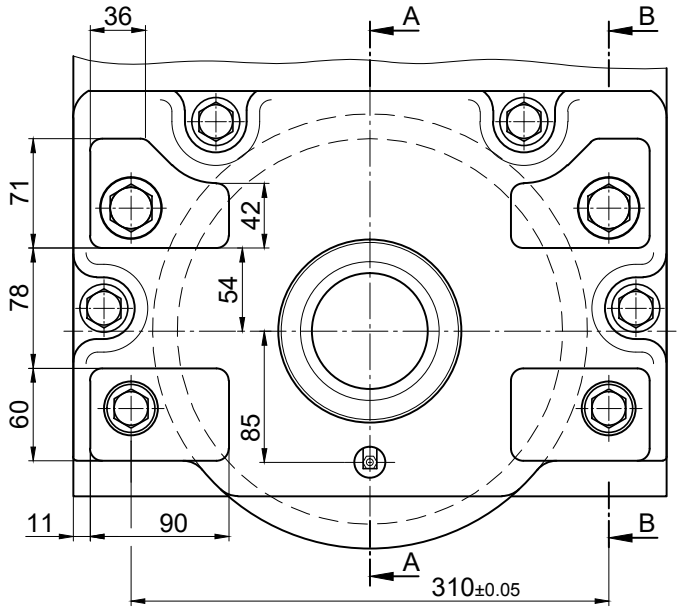

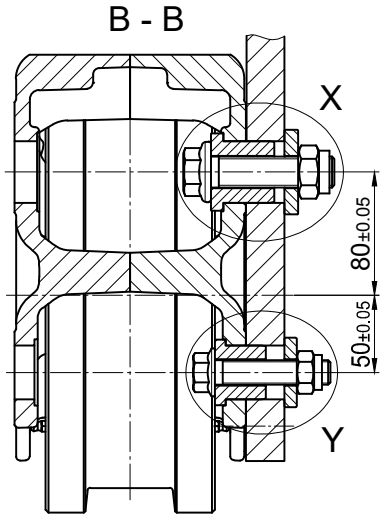

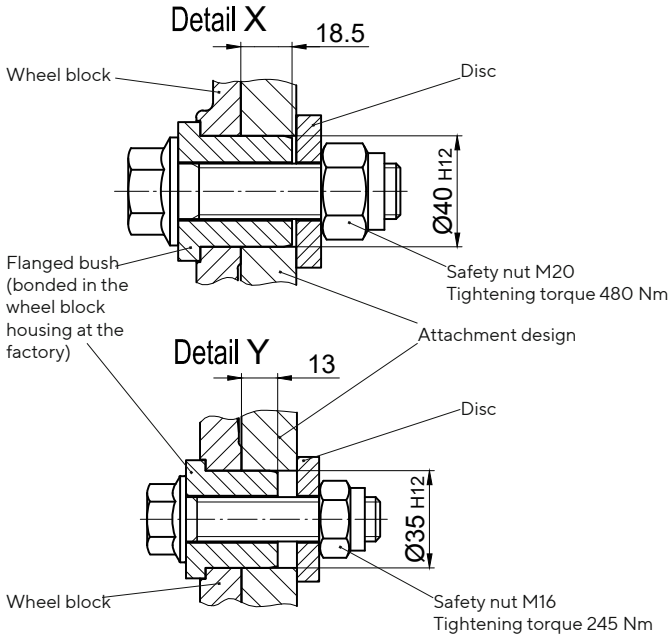

Side connection WA 250-V

Lateral connection option for low construction designs

Attachment variant 2:
Attachment design (e.g. hollow profile) is not accessible from the inside
Blind hole Ø40 H12×20 deep with thread M20 and
Blind hole Ø35 H12×15 deep with thread M16

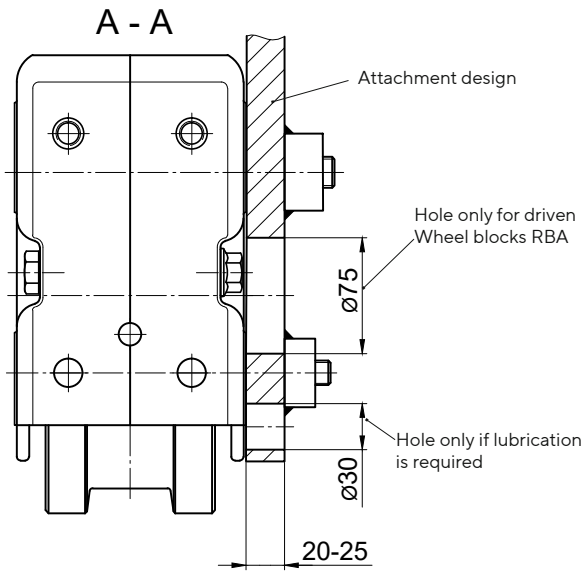

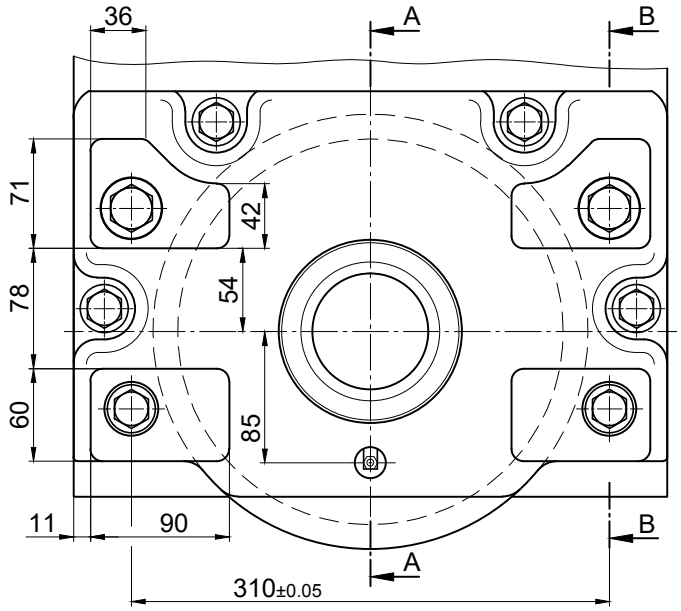

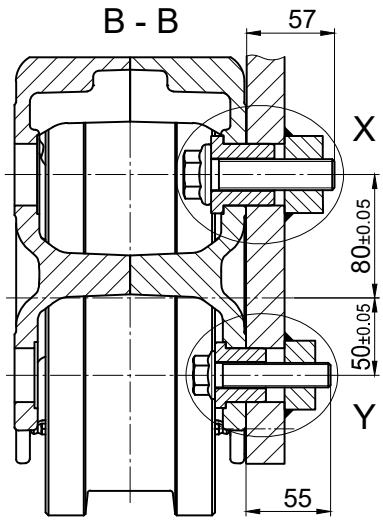

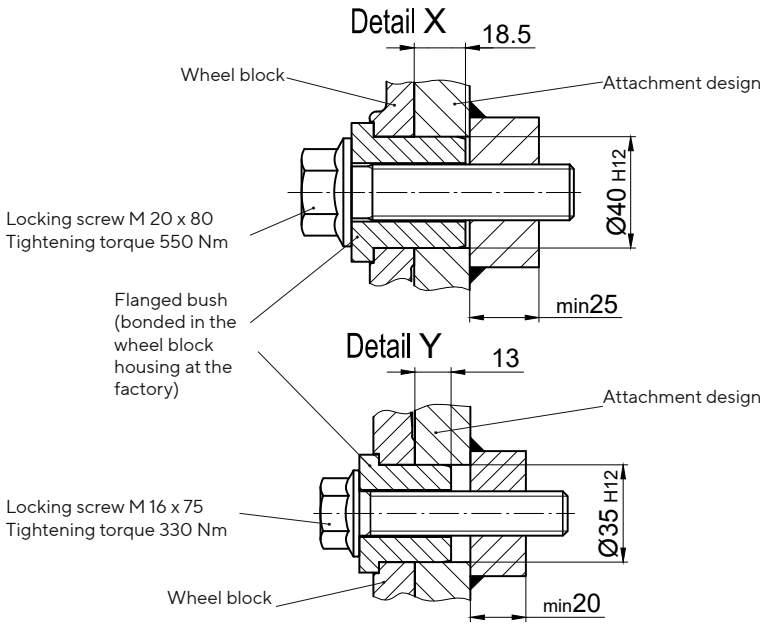

WHEEL BLOCK RB 250-V

Drive shafts suitable for slip-on gear mechanisms from other manufacturers on request.

Single drive unit

Drive shaft suitable for slip-on gear mechanism with splined-shaft profile in accordance with DIN 5480

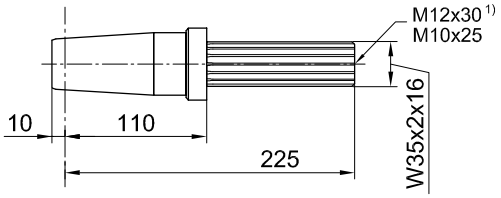

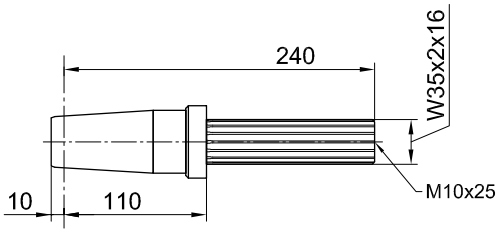

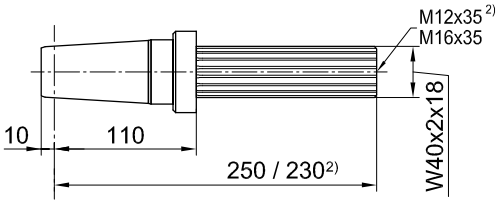

Slip-on gear mechanism		
Model	**Manu-facturer**	**Splined-shaft pro-file in acc. with DIN 5480**
FV 47 / KV 47	SEW	W35 x 2 x 16
SK 2282 EA 1)	NORD	
SPZT / SKZT 26..	PREMIUM STEPHAN	
FV 57 / KV 57	SEW	W35 x 2 x 16
F.A.T 48B 2)	SIEMENS (FLENDER)	W40 x 2 x 18
KA.T 48 2)		
CA.T 48 2)		
SK 3282 EA	NORD	
SK 9023.1A.EA		

WHEEL BLOCK RB 250-V

Drive shafts suitable for slip-on gear mechanisms from other manufacturers on request.

Single drive unit

Drive shaft suitable for slip-on gear mechanism with splined-shaft profile in accordance with DIN 5480

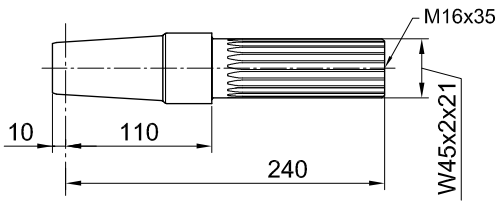

Slip-on gear mechanism		
Model	**Manu-facturer**	**Splined-shaft pro-file in acc. with DIN 5480**
FV 67 / KV 67	SEW	W45 x 2 x 21
SPZT / SKZT 36..	PREMIUM STEPHAN	

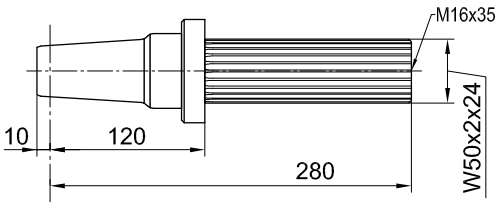

FV 77 / KV 77	SEW	W50 x 2 x 24
SK 4282 EA	NORD	
SPZT / SKZT 46..	PREMIUM STEPHAN	

WHEEL BLOCK RB 250-V

Drive shafts suitable for slip-on gear mechanisms from other manufacturers on request.

Single drive unit

Drive shaft suitable for slip-on gear mechanism with feather key connection in accordance with DIN 6885

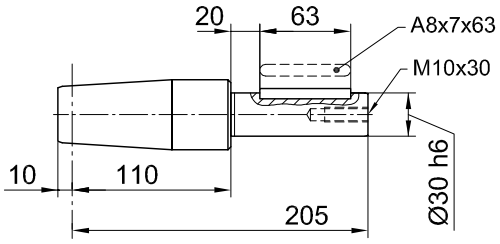

Slip-on gear mechanism		
Model	**Manu-facturer**	**Shaft journal**
FA / KA 37 SA 47	SEW	Ø30
FDA / FZA 38 B KA / CA 38	SIEMENS (FLENDER)	
O 32..H O 33..H K 33..H C 32..H	SIEMENS	
SK 0282 NBAB SK 1282 AB	NORD	
GFL 04..H GKS 04..H GSS 04..H	LENZE	
F 3..A	STÖBER	
SPZ 16H	PREMIUM STEPHAN	

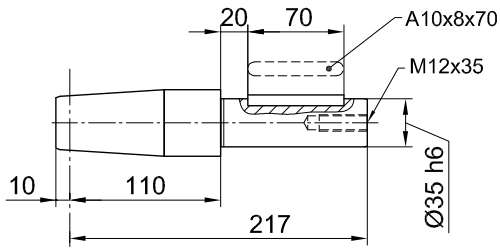

FA / KA 47 SA 57	SEW	Ø35
SK 2282 AB	NORD	
FDA / FZA 48 B KA / CA 48	SIEMENS (FLENDER	
O 42..G O 43..G K 43..H C 42..H	SIEMENS	
GFL 05..H GKS 05..H GSS 05..H	LENZE	
K1..A S2..A	STÖBER	
SPZH 26.. SKZH 26..	PREMIUM STEPHAN	

WHEEL BLOCK RB 250-V

Drive shafts suitable for slip-on gear mechanisms from other manufacturers on request.

Single drive unit

Drive shaft suitable for slip-on gear mechanism with feather key connection in accordance with DIN 6885

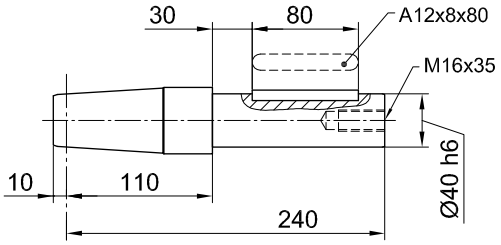

Slip-on gear mechanism		
Model	**Manu-facturer**	**Shaft journal**
FA 57 / KA 57 FA 67 / KA 67 SA 67	SEW	Ø40
SK 3282 AB	NORD	
FDA 68 B FZA 68 B KA 68 / CA 68	SIEMENS (FLENDER)	
O 62..G O 63..G K 63..G C 62..G	SIEMENS	
K4..A	STÖBER	
SPZH 36.. SKZH 36..	PREMIUM STEPHAN	

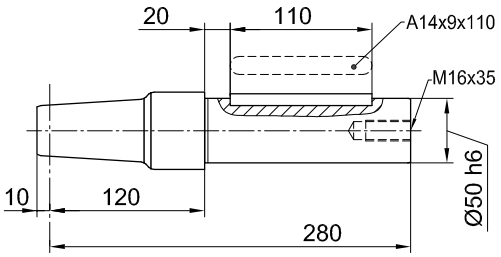

FA 77 KA 77 SA 77	SEW	Ø50
SK 4282 AB	NORD	
FDA 88 B FZA 88 B KA 88 CA 88	SIEMENS (FLENDER)	
O 82..G O 83..G K 83..G C 82..G	SIEMENS	
GFL 07..H GKS 07..H GSS 07..H	LENZE	
K 5..A K 6..A	STÖBER	
SPZH 46.. SKZH 46..	PREMIUM STEPHAN	

WHEEL BLOCK RB 250-V

Drive shafts suitable for slip-on gear mechanisms from other manufacturers on request.

Central drive unit

Both wheel blocks are driven with only one gear motor
(Splined-shaft profile, feather key connection and shrink disc attachment)

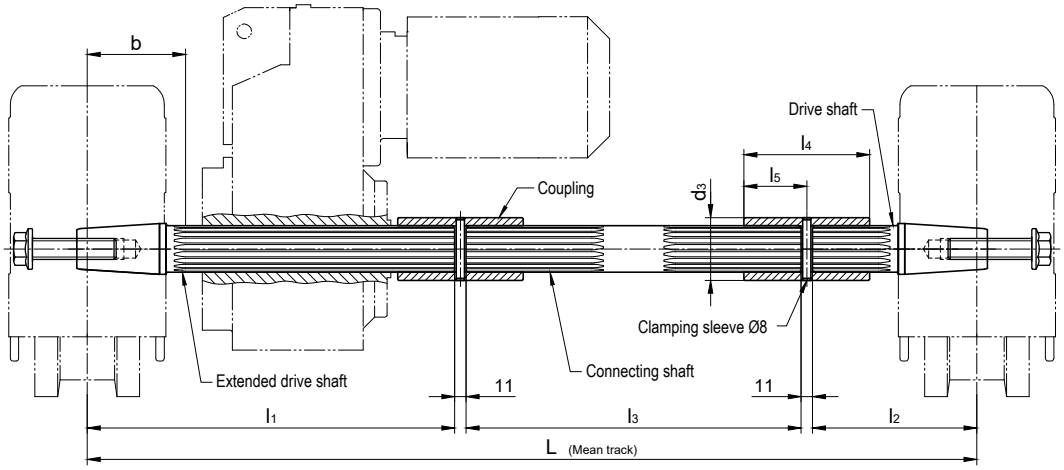

Model	Manufac-turer	Splined-shaft-profile DIN 5480	L	l1	l2	l3	Centre RB to gearing b	l4	l5	d3	Clamping sleeve DIN 1481
AF 05 AUK 30/ WUK 30	DEMAG	W35 x 2 x 16	For ordering, please provide	350	225	Dimen-sion L minus 597	105	100	50	50	8 x 50
FV 47 / KV 47 FV 57 / KV 57	SEW										
SK 2282 EA	NORD										
SPZT 26.. SKZT 26..	PREMIUM STEPHAN										
F.A.T 48 B KA.T 48 CA.T 48	SIEMENS (FLENDER)	W40 x 2 x 18		350	148	Dimen-sion L minus 520	105	100	50	55	8 x 55
SK 3282 EA SK 9023.1A.EA	NORD										
AF 06 / AF 08 AUK 40	DEMAG	W45 x 2 x 21		351	157	Dimen-sion L minus 530	105	120	60	60	8 x 60
FV 67 KV 67	SEW										
SPZT 36.. SKZT 36..	PREMIUM STEPHAN										
AF 08 AUK 50	DEMAG	W50 x 2 x 24		400	158	Dimen-sion L minus 580	110	120	60	65	8 x 65
FV 77 KV 77	SEW										
SK 4282 EA SK 9033.1A.EA	NORD										
F.A.T 68 B KA.T 68 CA.T 68	SIEMENS (FLENDER)										
SPZT 46.. SKZT 46..	PREMIUM STEPHAN										

WHEEL BLOCK RB 250-V

Drive shafts suitable for slip-on gear mechanisms from other manufacturers on request.

Central drive unit

Both wheel blocks are driven with only one gear motor
(Splined-shaft profile, feather key connection and shrink disc attachment)

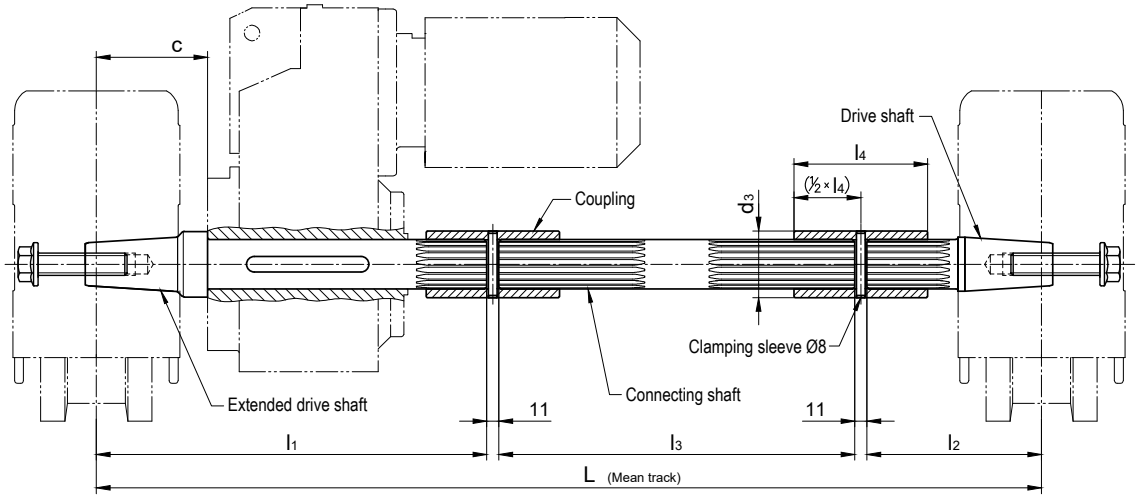

For gearboxes with hollow shaft and feather key connection in acc. with DIN 6885

Suitable for gearboxes with hollow shaft		**L**	**l1**	**l2**	**l3**	**c** gearbox stop	**Feather key** DIN 6885	**Coupling** Internal gearing/ d3 x l4
Inner-Ø	Length							
Ø35	≤ 150	**For ordering, please provide**	330	225	Dimension L minus 577	110	A 10 x 8 x 70	N35 x 2 x 16 Ø50 x 100
Ø40	≤ 180		350	148	Dimension L minus 520	110	A 12 x 8 x 100	N40 x 2 x 18 Ø55 x 100
Ø50	≤ 210		400	158	Dimension L minus 580	120	A 14 x 9 x 110	N50 x 2 x 24 Ø60 x 120
Ø60 *	≤ 240		430	158	Dimension L minus 610	120	A 18 x 11 x 125	N60 x 2 x 28 Ø75 x 125

Suitable for gearboxes of the following manufacturers:
Siemens Motox (Flender), Bauer (Danfoss), KEB, Lenze, Nord, PREMIUM STEPHAN, SEW, Siemens, Stöber, Demag

Et.al. suitable type designations, refer to the single drive unit.

Drive shafts without gearbox stop and with adapted distance (c) on request.

* On request, with indication of max. drive torque..

WHEEL BLOCK RB 250-V

Horizontal roller guide
for wheels of Ø250 (Form 1-5)

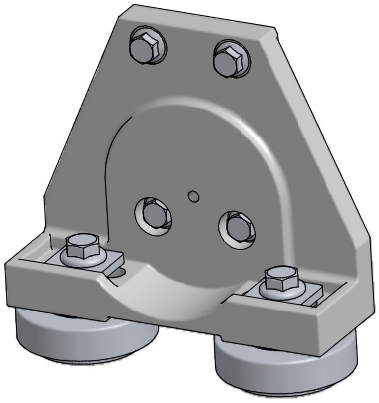

Horizontal roller guide with adjustable guide rollers made of 42CrMo4+QT.

The installation of a cellular plastic buffer (page 144) is possible without spacer discs. Parallel operating wheel blocks without horizontal roller guide can be installed with spacer discs for length compensation (see fig.).

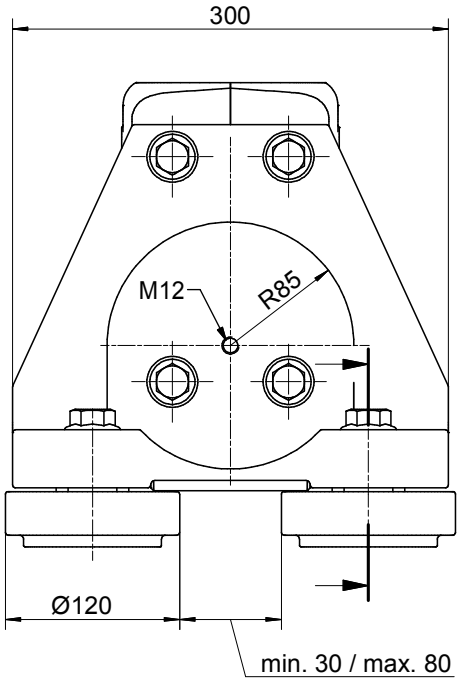

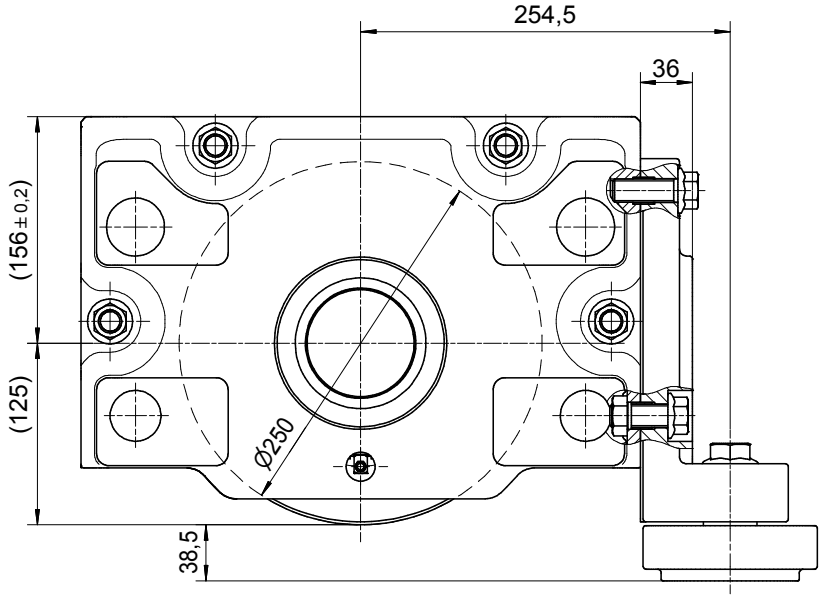

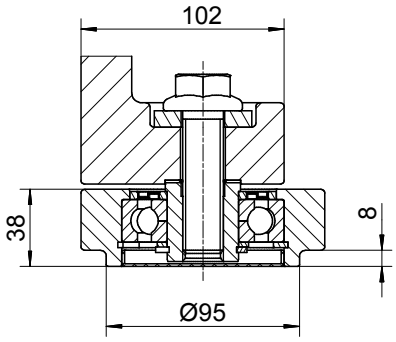

Acceptable horizontal load:
Max. 2400 kg
(As single part max. 3200 kg)

All necessary fastening elements are included in the scope of delivery.

Horizontal roller guide for other rail profiles are available on request.

WHEEL BLOCK RB 250-V

Horizontal roller guide

for wheels of Ø290 and Ø285
with coating made of vulkollan or PA12G

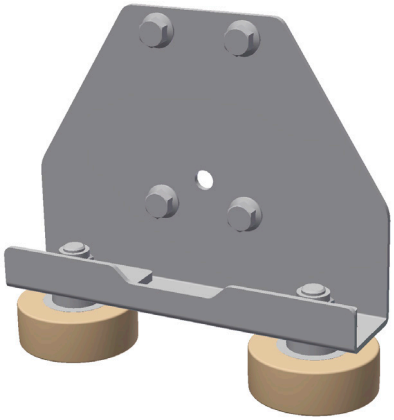

Horizontal roller guide with adjustable guide rollers made of PA12G.

The installation of a cellular plastic buffer is possible by using an additional spacer discs.

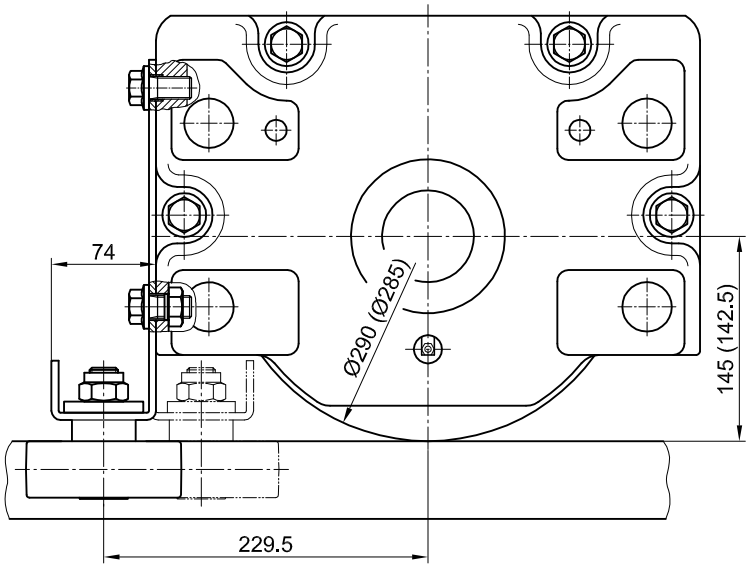

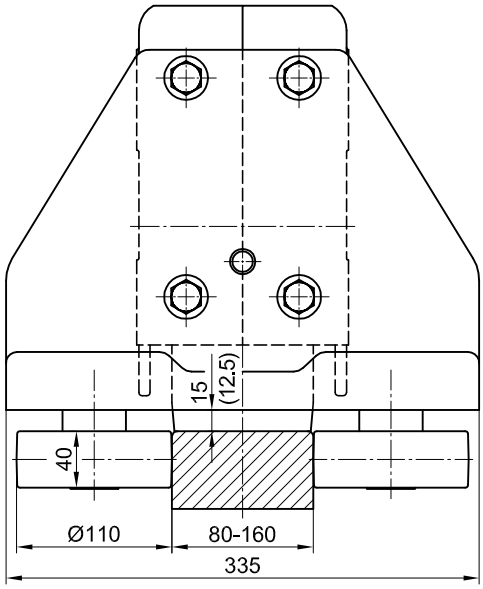

Magnified detail drawing of the guide roller

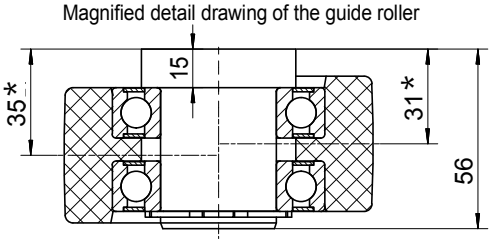

By turning the unsymmetrical guide roller, two clearances* can be adjusted.

Acceptable contiunous load: 700 kg
Maximum short-term load: 1100 kg

All necessary fastening elements are included in the scope of delivery.

Horizontal roller guide for other rail profiles are available on request.